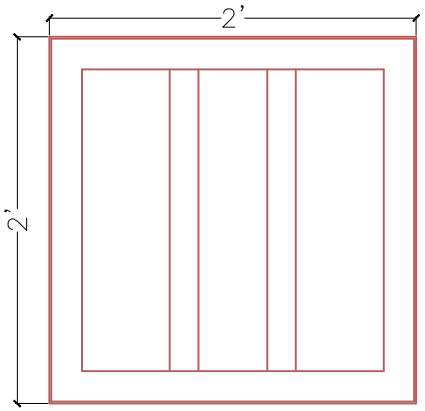

DRAIN BOX PLAN VIEW

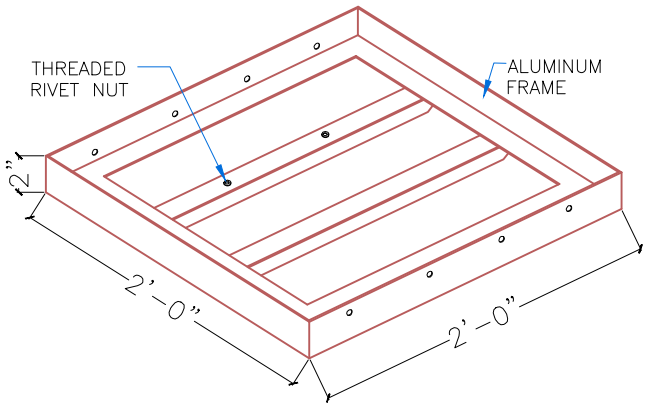

DRAIN BOX 3D VIEW

TILE:
MIN. 24" X 24" X 3/4' THICKNESS (BY OTHERS)
SET IN LARGE FORMAT TILE MORTAR.
DO NOT GROUT JOINTS TO ALLOW FOR
WATER DRAINAGE. (REFER TO LARGE FORMAT
MORTAR LAYOUT DETAIL FOR REQUIRED SPACING)

ECHO FLOW:
2" MIN. THICKNESS
2'X2' OR 2' X 4'

PEDESTALS:
8,000 PSI CONSTRUCTION
GROUT CYLINDERS
CAST- IN-PLACE

COVER BOARD:
1/2" MINIMUM SECUROCK® BRAND
CEMENT ROOF BOARD ADHERED WITH
CR-20 SPLATTER (PATTERN) FOAM

INSULATION:
60 PSI INSULFOAM (EPS)
ADHERED WITH CR-20
SPLATTER(PATTERN) FOAM

STRUCTURAL CONC. SLAB

SECURE ALUMINUM FRAME AROUND
PERIMETER OF 2'X2' DRAIN BOX
PER NOA, ECHO FLOW BLOCK AND
TILE SURFACING (REMOVABLE FOR
DRAIN ACCESS) INSTALLED TO MATCH
HEIGHT OF SURROUNDING SYSTEM.

WATERPROOFING:
ALSAN RS 230 SYSTEM ADD ADDITIONAL COAT OF
230 AS BONDING COAT AND BROADCAST W/QUARTZ

CAP PLY: SOPREMA COLPHENE 180 FR GR,
ADHERED WITH COLDPLY EF ADHESIVE AT
1.5 - 2.5 GAL/SQUARE

BASE PLY: SOPREMA COLPHENE 180 SANDED,
ADHERED WITH COLDPLY EF ADHESIVE AT
1.5 - 2.5 GAL/SQUARE

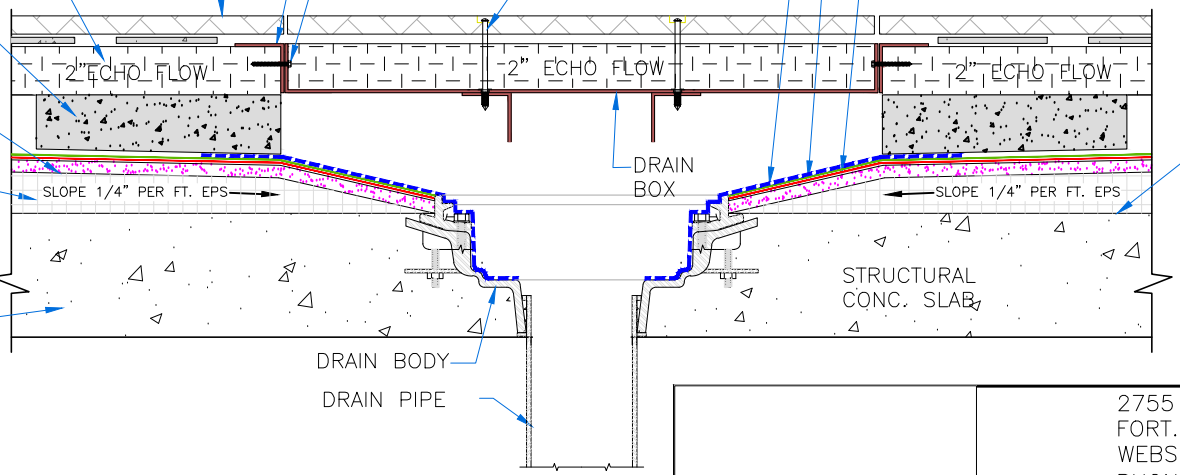

(INSULATED) ECHO CONCRETE PEDESTAL SYSTEM
WITH TILE SURFACING (-465 PSF NOA)

NOA No.:25-0702.01 (PAGE 14 of 72)

DETAIL TO BE USED IN CONJUNCTION WITH MIAMI ECHO
GENERAL REQUIREMENTS, APPLICATION METHODS AND APPROVED DETAILS.

Miami echo
NEXT-USE BUILDING MATERIALS

2755 NW 63RD COURT,
FORT. LAUDERDALE FL 33309
WEBSITE: WWW.MIAMIECHO.COM
PHONE: (954) 970-8565

TITLE: PEDESTAL
DRAIN DETAIL- CONC. SLAB

SCALE	DATE	DWN	CHK
NTS	07/20/26	PD	RS

DRAWING NUMBER
DTL#101